SCA / SCA-X sizes 80

Overhaul kit | Code number 148B6164

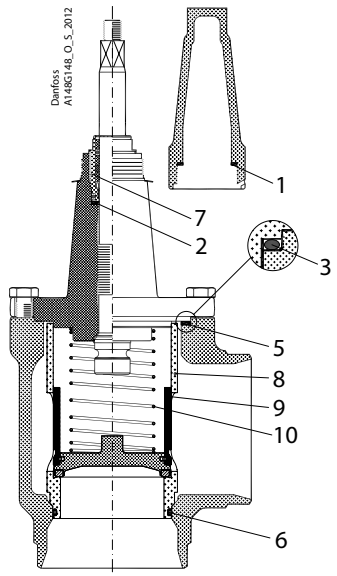

SCA/SCA-X

1 = Nylon Ø45 mm Ø1.88" Total no. = 1	**2** = Alu. Ø31.5 mm Ø1.24" Total no. = 1	**3** Ø82 mm Ø3.23" Total no. = 1	**5** = Fibre Ø76 mm Ø3.78" Total no. = 1	**6** Ø63 mm Ø2.48" Total no. = 1
7 Ø32 mm Ø1.26" Total no. = 1	**8** Ø79.5 mm Ø3.13" Total no. = 1	**9** Ø70 mm Ø2.76" Total no. = 1	**10** 160 mm 6.3" Total no. = 1	

NOTE:
When replacing the packing gland (pos. 7) in SCA-X or SCA the aluminium gasket (pos. 2) is needed.